PRODUCT SPECIFICATION FOR LCD MODULE

Revision: 0.0

Model No: BL50017

Module Type: COG+FPC+B/L+ST+TP

APPROVED SIGNATURE

□ Approved Product Specification only
■ Approved Product Specification and Samples

Prepared By	Checked By	Approved By

Contents

1. General Description 3
2. Physical Features 3
3. Mechanical Specification 3
4. Outline Dimension 4
5. Absolute Maximum Ratings 5
6. Electrical Characteristics 5
7. Module Function Description 6
8. Electro-Optical Characteristics 11
9. Reliability 13
10. Inspection Standards 14
11. Precautions For Using LCD Modules 20
12. Records Of Version 22

1. General Description

BL50017 is a transmissive type a-Si TFT-LCD (amorphous silicon thin film transistor liquid crystal display) module, which is composed of a TFT-LCD panel, a driver circuit and a backlight unit. The panel size is 5.0 inch and the resolution is 480(RGB)*272, the panel can display up to 16.7M colors. The LCM can be easily accessed by micro-controller via parallel interface.

2. Physical Features

Display Mode	TFT-LCD Module
	Active matrix TFT, Transmissive type
Display Format	Graphic 480×RGB×272 Dot-matrix
Input Data	24 bit RGB interface
Viewing Direction	6 O'clock

3. Mechanical Specification

Item	Contents	Unit
Module size (W×H×T)	120.7 × 75.8× 4.25	mm
Number of dots	480(RGB) × 272	---
Active area (W×H)	110.8×62.83	mm

4. Outline Dimension

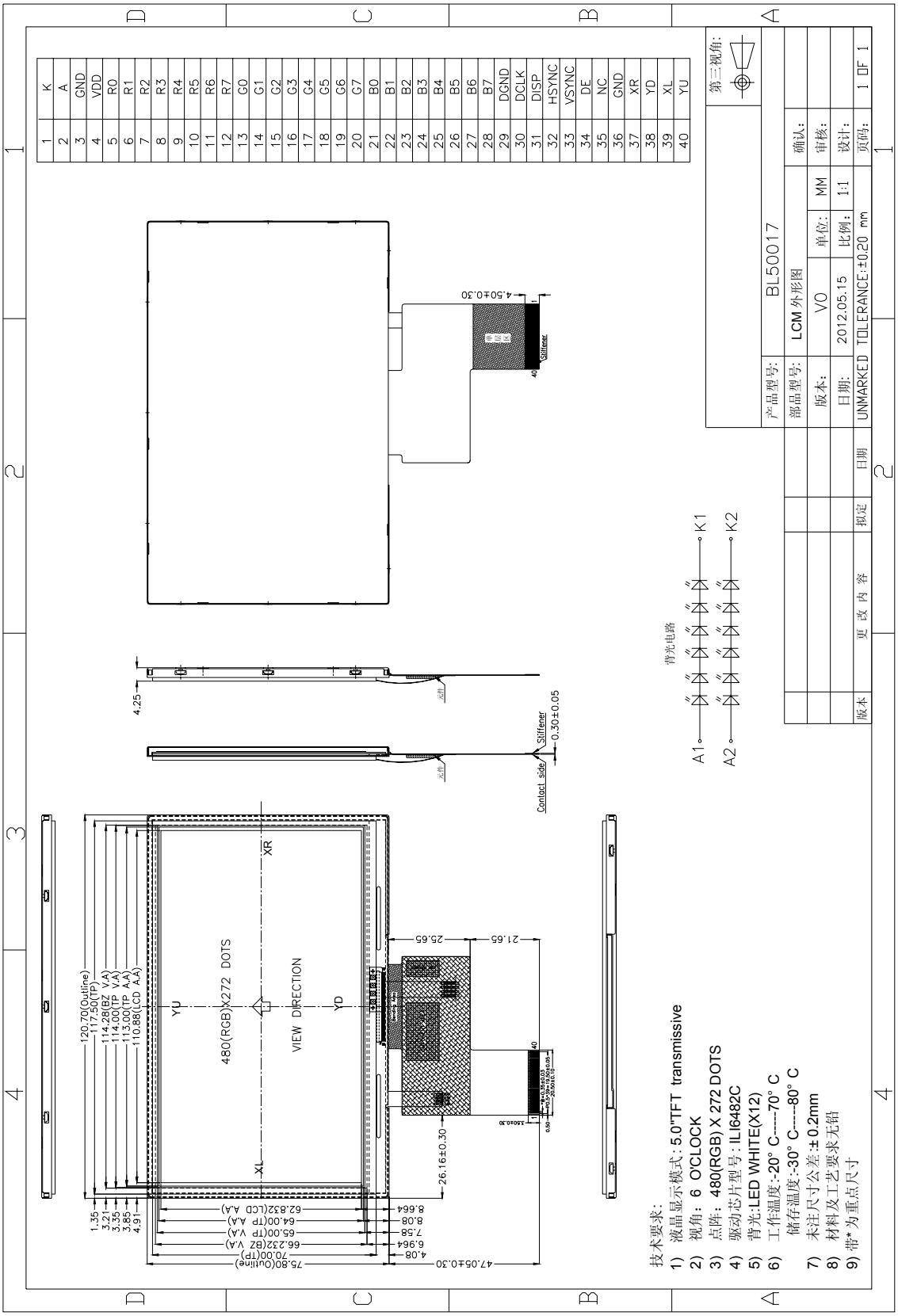

5. Absolute Maximum Ratings

Item	Symbol	Min	Max	Unit	Remark
Power Voltage	VCC	0.3	5.0	V	Note1、Note2
Input Voltage	VIN	-0.3	5.0	V	
Operating temperature	TOPR	-20	70	℃	
Storage temperature	TSTR	-30	80	℃	
Humidity	---	---	90	%RH	---

Remark:

Note 1) The driver IC may be permanently damaged if it is used under the condition exceeding the above absolute maximum values. It is also recommended to use the driver IC within the limit of its electric characteristics during normal operation. Exceeding the conditions may lead to malfunction of it and affect its credibility.

Note 2) The voltage from VSS.

6. Electrical Characteristics

Item		Symbol	Rating			Unit	Remark
			Min	Typ	Max		
Power Voltage	Logic	VCC	3.0	3.3	3.6	V	Note1
Input Voltage	L level	VIL	GND	---	0.3*VCC	V	VCC=3.0 ~ 3.6V
	H level	VIH	0.7* VCC	---	VCC	V	
LCD Drive Power current		ILCD	---	7	---	mA	VCC=3.3V
Backlight Voltage		ILED=20*2mA		19.2		V	

Remark:

Note1:Vcom must be adjusted to optimize display quality: Cross-talk, Contrast Ratio and etc.

7. Module Function Description

7-1. Block Diagram Of LCM

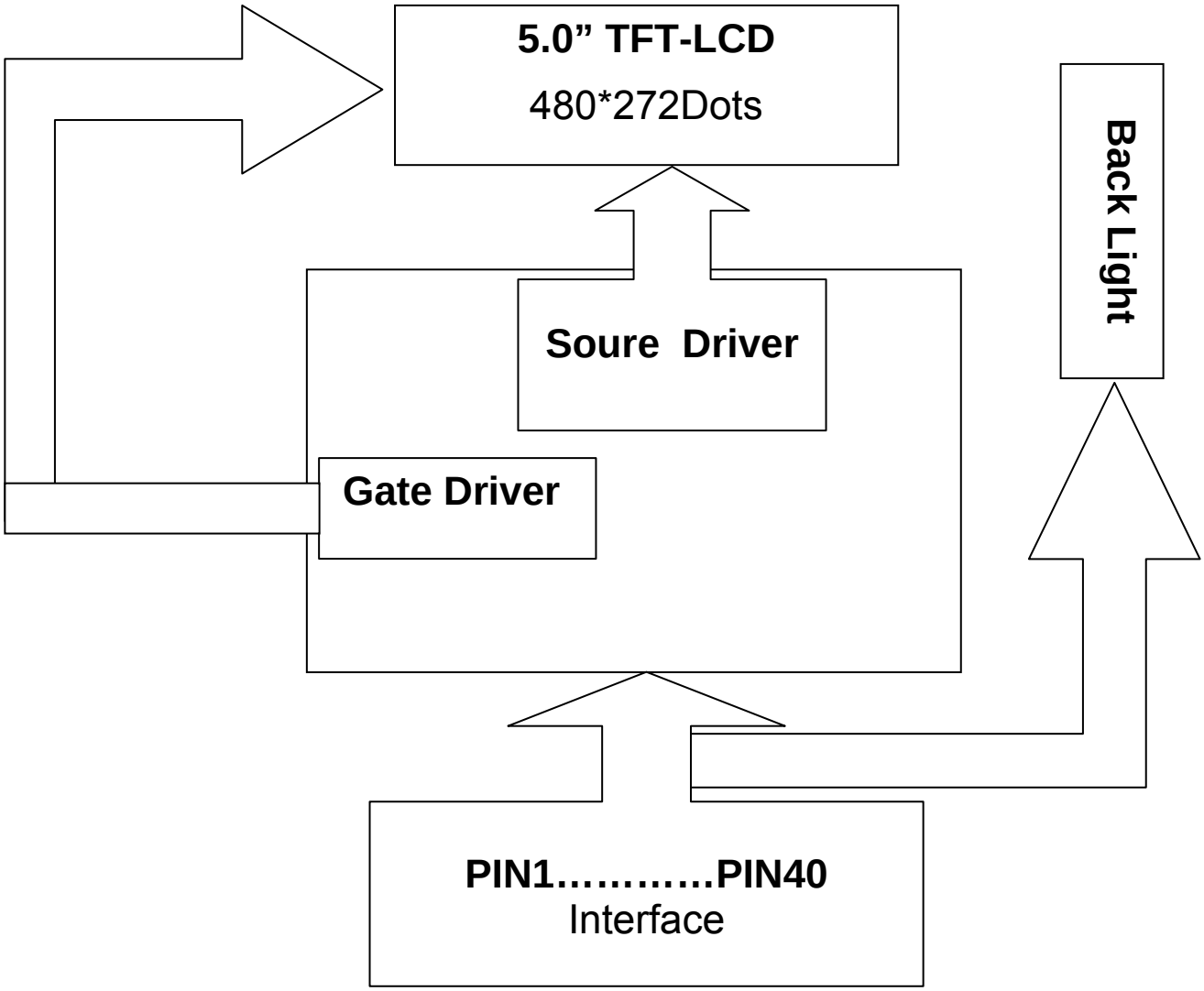

7-2. Pin Description

PIN NO.	Symbol	I/O	Description
1	LED-	P	Power for LED backlight cathode
2	LED+	P	Power for LED backlight anode
3	GND	P	Power ground
4	VDD	P	Power voltage
5~12	R0~R7	I	Red data
13~20	G0~G7	I	Green data
21~28	B0~B7	I	Blue data
29	GND	P	Power ground
30	DCLK	I	Pixel clock
31	DISP	I	Display on/off
32	HSYNC	I	Horizontal sync signal
33	VSYNC	I	Vertical sync signal
34	DEN	I	Data enable
35	NC	--	No connect
36	GND	P	Power ground
37	XR	--	Touch Panel
38	YD	--	Touch Panel
39	XL	--	Touch Panel
40	YU	--	Touch Panel

7-3. Timing Characteristics

7.3.1 Data Input Format

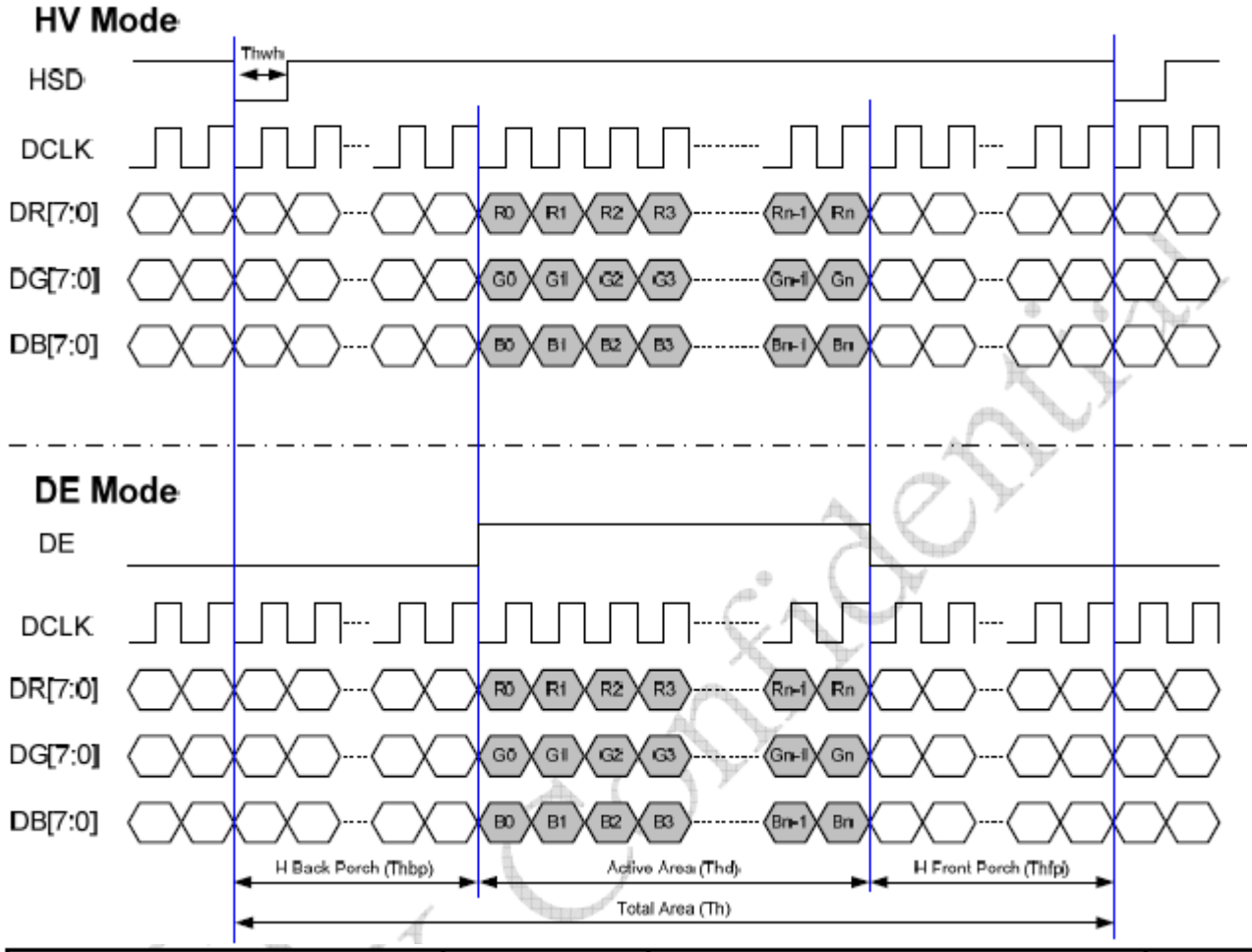

Parameter	Symbol	Value			Unit
		Min.	Typ.	Max.	
DCLK frequency	fclk	5	9	12	MHz
VSD period time	Tv	277	288	400	H
VSD display area	Tvd		272		H
VSD back porch	Tvb	3	8	31	H
VSD front porch	Tvfp	2	8	97	H
HSD period time	Th	520	525	800	DCLK
HSD display area	Thd		480		DCLK
HSD back porch	Thbp	36	40	255	DCLK
HSD front porch	Thfp	4	5	65	DCLK

7.3.2 AC Electrical Characteristics

AC Electrical Characteristics(VDDIO=1.8V to VDD, VDD=3.0V to 3.6V, GND=0V, and TA=-20°C to +85°C)

Parameters	Symbol	Min.	Typ.	Max.	Unit	Conditions
System operation timing						
VDD power source slew time	TPOR	-	-	20	ms	From 0V to 0.99×VDD
GRB pulse width	tRSTW	10	50	-	μs	R=10kohm & C=1μF
Input output timing						
DCLK clock time	Tclk	33.3	-	-	ns	DCLK=30MHz
DCLK clock low period	Tcwl	40	-	60	%	
DCLK clock high period	Tcwh	40	-	60	%	
Clock rising time	Trck	9	-	-	ns	
Clock falling time	Tfck	9	-	-	ns	
HSD width	Thwh	1	-	-	DCLK	
HSD period time	Th	55	60	65	μs	
HSD setup time	Thsu	12	-	-	ns	
HSD hold time	Thhd	12	-	-	ns	
VSD width	Tvwh	1	-	-	Th	
VSD setup time	Tvsu	12	-	-	ns	
VSD hold time	Tvhd	12	-	-	ns	
Data setup time	Tdasu	12	-	-	ns	
Data hold time	Tdahd	12	-	-	ns	
DE setup time	Tdesu	12	-	-	ns	
DE hold time	Tdehd	12	-	-	ns	
Source output setting time	Tsst	-	-	TBD	μs	10% to 90% CL=60pF & RL=2kohm
Gate output setting time	Tgst	-	-	TBD	ns	10% to 90% CL=60pF & RL=10kohm
VCOM output setting time	Tcst	-	-	TBD	μs	10% to 90% CL=40nF & RL=50ohm
Time from VSD to the data input of 1st line	Tvs	3	8	31	Th	HV mode By HDL[4:0] setting
3-wire serial communication AC timing						
Serial clock	Tsck	200	-	-	ns	For SCL pin
SCL pulse low period	Tckl	40	-	60	%	
SCL pulse low period	Tckh	40	-	60	%	
Serial data setup time	Tisu	50	-	-	ns	
Serial data hold time	Tihd	50	-	-	ns	
Serial clock high/low	Tssw	50	-	-	ns	
CSB to VSD	Tcv	1			μs	
CSB distinguish time	Tcd	400	-	-	ns	
CSB input setup time	Tcsu	50	-	-	ns	
CSB input hold time	Tchd	50	-	-	ns	

LCTEK Confidential

7.3.3 Power on/off Sequence

Power on

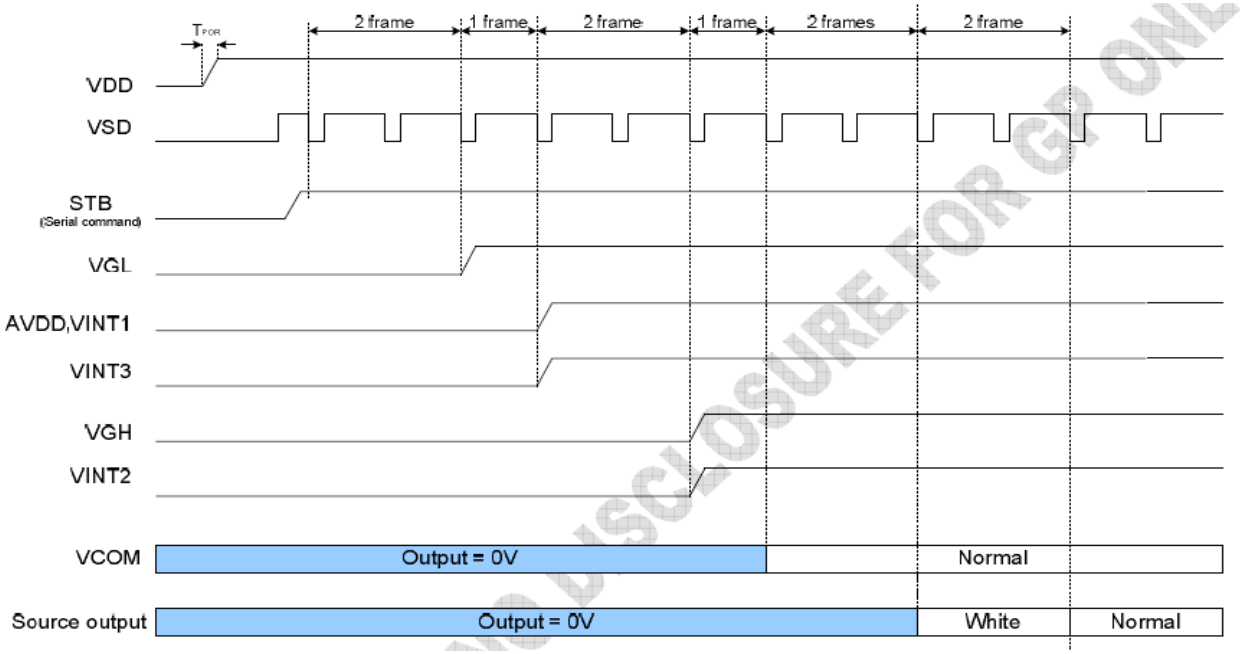

Power off

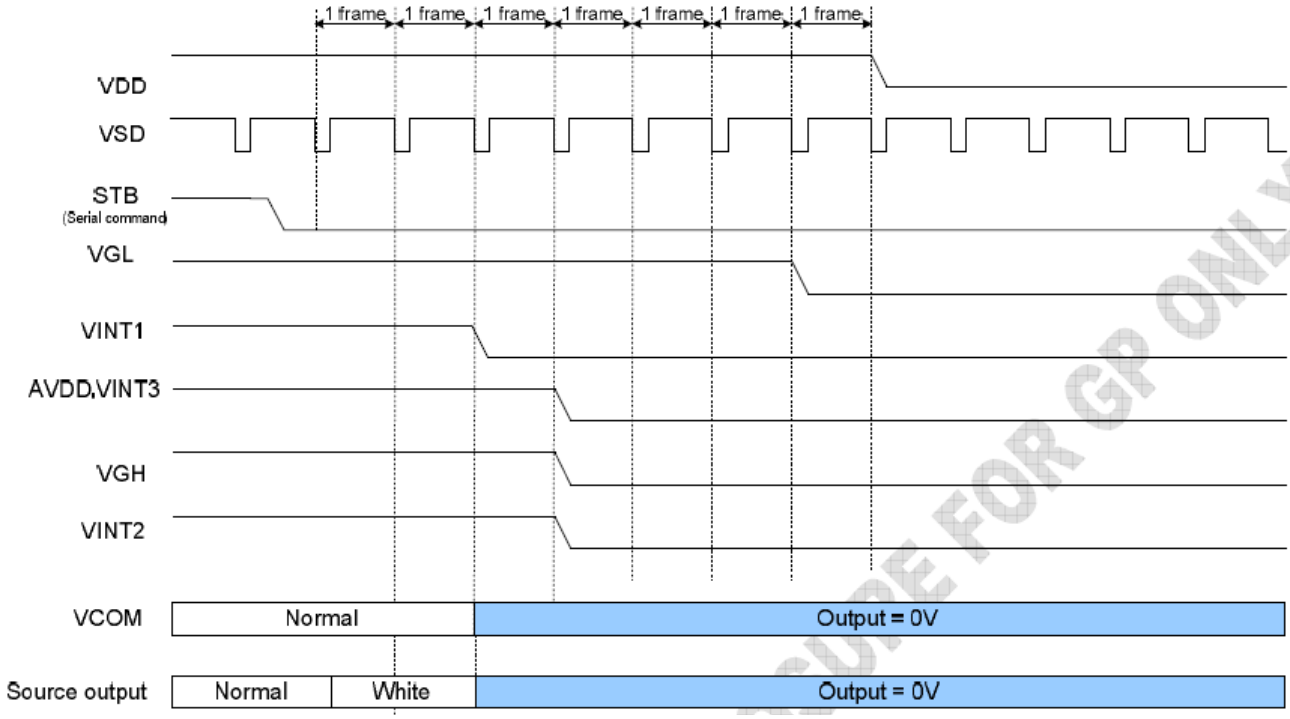

Notes:

Data include R0~R7, G0~G7, B0~B7, HSD, VSD, DCLK, DE
Power on sequence: VDD → DISP → Data → V_{LED}
Power off sequence: DISP → V_{LED} → Data → VDD
VDD power input timing: 0.5ms < Tr < 10ms; Toff > 500ms

8. Electro-Optical Characteristics

Item		Symbol	Condition	Min.	Typ.	Max.	Unit	Remark
Response time		Tr +Tf	θx = θy =0	---	30	45	ms	Note 1
Contrast Ratio		CR		250	350	---	---	Note 2
Transmittance		T%		5.9	6.3	---	%	
Color chromaticity	white	Wx		0.285	0.305	0.325	-	Reference Only
		Wy		0.314	0.334	0.354		
	Red	Rx		0.588	0.608	0.628		
		Ry		0.296	0.316	0.336		
	Green	Gx		0.285	0.3305	0.3325		
		Gy		0.536	0.556	0.576		
	Blue	Bx		0.115	0.135	0.155		
		By		0.117	0.137	0.157		
Viewing angle	Hor.	θ_L	CR ≥ 10	--	65	---	Deg.	Note 3
		θ_R		--	65	---		
	Ver.	θ_U		--	55	---		
		θ_D		--	55	---		
Luminance ($I_F = 40mA$)		L		180	200	---	cd/m2	Note4

Note(1) Definition of Response Time:Sum of T_R and T_F

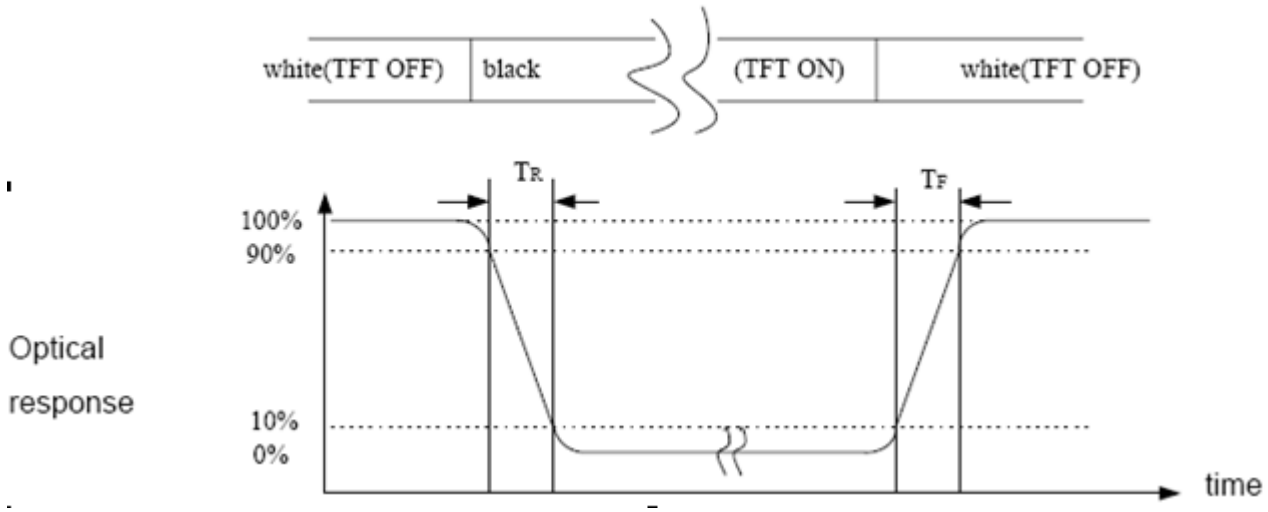

Note (2) Definition of Contrast Ratio(CR):measureed at the center point of panel

$$CR = \frac{\text{Luminance with all pixels white}}{\text{Luminance with all pixels black}}$$

Note (3) Definition of Viewing Angle x and y:

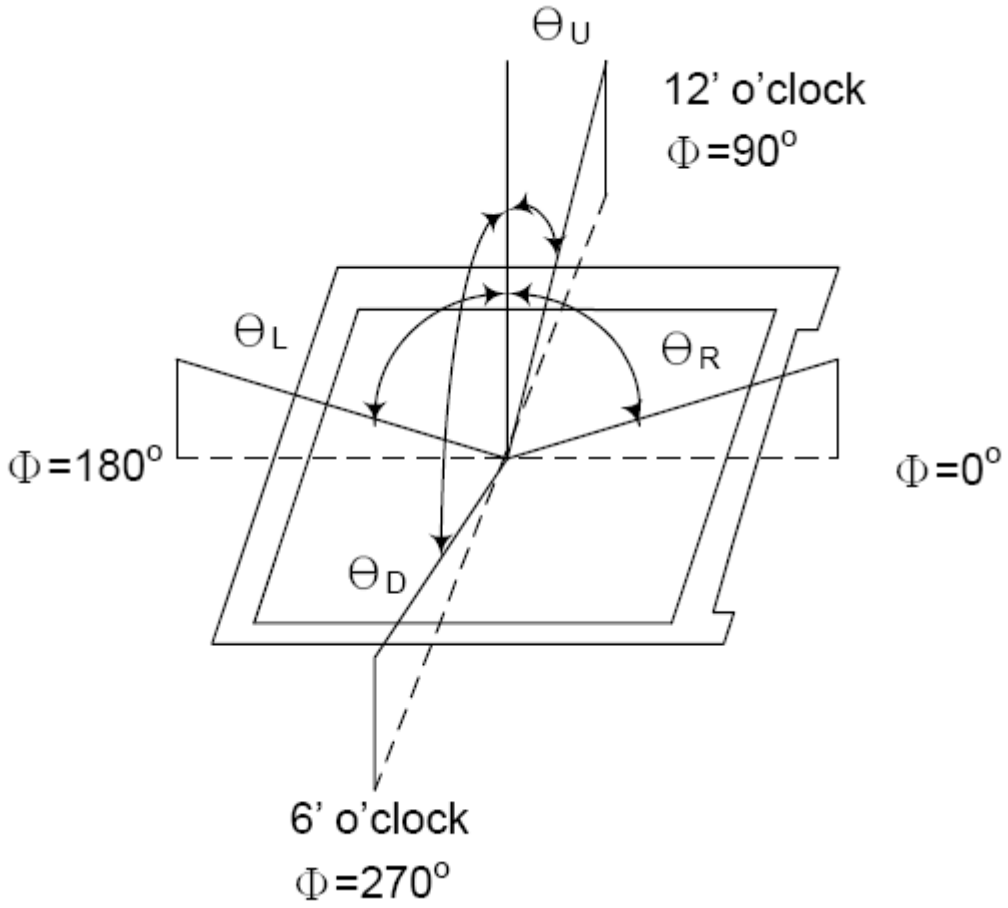

Note(4) Backlight circuit

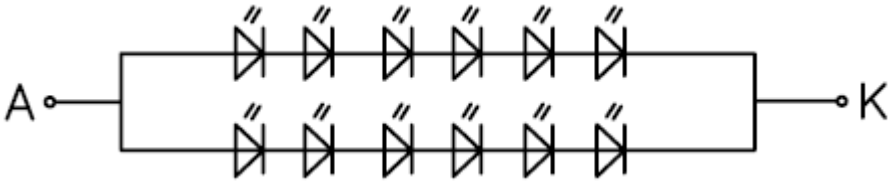

背光电路图

9. Reliability

10. 1. MTBF

The LCD module shall be designed to meet a minimum MTBF value of 50000 hours with normal. (25°C in the room without sunlight)

10. 2. Test condition

ITEM	CONDITIONS	CRITERION
OPERATING TEMPERATURE	HIGH TEMPERTURE +70℃ 48HRS	NO DEFECT IN DISPLAYING AND OPERATIONAL FUNCTION
	LOW TEMPERTURE -20℃ 48HRS	
STORAGE TEMPERATURE	HIGH TEMPERTURE +80℃ 48HRS	NO DEFECT IN DISPLAYING AND OPERATIONAL FUNCTION
	LOW TEMPERTURE -30℃ 48HRS	
HUMIDITY	60℃ 90%RH 48HRS	NO DEFECT IN DISPLAYING AND OPERATIONAL FUNCTION

10. Inspection Standards

1. AQL(Acceptable Quality Level)

AQL of major and minor defect

	MAJOR DEFECT	MINOR DEFECT	MAJOR+MINOR
APPEARANCE	0.40%	1.0%	1.0%
ELECTRIC-OPTICAL	0.15%	0.15%	0.15%

2. Basic conditions for inspection

The LCM face to us, in normal environment, the lux is 1000±200.(Darkroom's lux:100±50),

About an angle of incidence 30, a distance of 30cm with normal eye,with an angle of 45 degree to check the products without uncovering the film!

(As shown below)

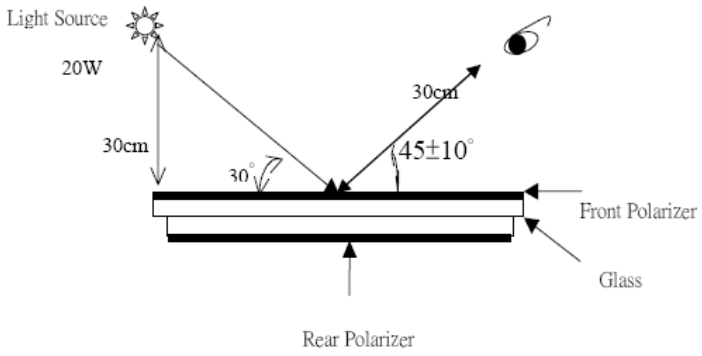

3. Inspection item and criteria

3.1 Visual inspection criterion in immobility

3.1.1 Glass defect

No	Defect item	Criteria	Remark
1	Dimension Unconformity (Major defect)	By Engineering Drawing	

No	Defect item	Criteria	Remark
2	Cracks (Major defect)	1.Linear cracks on panel 【Reject】 2. Nonlinear crack contrast by limited sample	
3	Glass extrude the conductive area (minor defect)	a: disregards and no influence assemblage 1) b≦1/3Pin width(non bonding area) 【Accept】 2) bonding area≦0.5mm 【Accept】	a:Length, b:Width
4	Pin-side，conductive area damaged (minor defect)	(a c：disregards) b≦ 1/3 of effective length for bonding electrode 【Accept】	a:Length，b:Width，c:Thickness 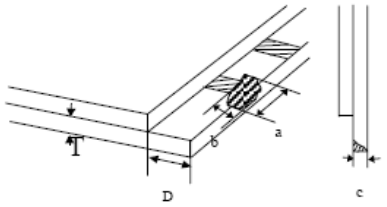
5	Pin-side，non-conductive area damaged (minor defect)	1) Damage area don't touch the ITO (Inclueling contraposition mark,except scribing mark) 【Accept】 2) c<T b≦BM 1/3 of width 【Accept】 3) c=T b not touch the seal glue 【Accept】 4) a disregards	a:Length，b:Width，c:Thickness 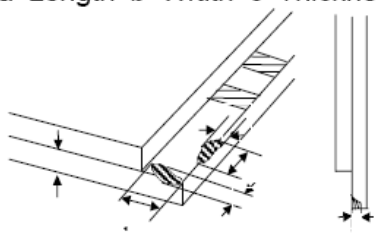

No	Defect item	Criteria	Remark
6	Non-pin-side damage (minor defect)	c<T 1) b exceeds 1/3 BM 【Reject】 c=T b not touch the seal glue 【Reject】	c : Thickness b: width of damage 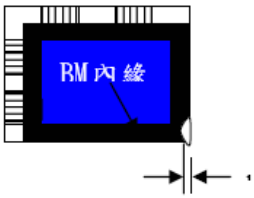

3.1.2 LCD appearance defect (View area)

No	Defect item	Criteria		Remark
1	Fiber、glass cratch、polarizer scratch/folded (minor defect)	Specification	Allowable	note1: L：Length，W：Width note2: disregard if out of AA 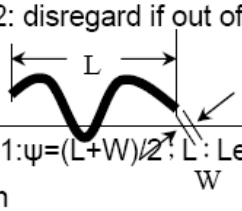
		0.05mm<W≦0.1mm; L≦3.0mm	1	
		W>0.1mm ; L>3.0mm	0	
2	Polarizer bubble、concave and convex (minor defect)	ψ≦0.2mm	disregard	note 1:ψ=(L+W)/2；L：Length，W：Width note2: disregard if out of AA
		0.2mm<ψ ≦ 0.3mm	2	
		0.3mm<ψ ≦ 0.5mm	1	
		0.5mm<ψ	0	
3	Black dots、dirty dots、impurities、eyewinker (Major defect)	ψ≦0.15mm	disregard	note2: disregard if out of AA 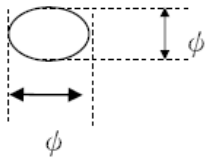
		0.15mm<ψ ≦ 0.25mm	2	
		0.25mm<ψ ≦ 0.3mm	1	
		0.3mm<ψ	0	
4	Polarizer prick (Major defect)	ψ≦0.1mm	disregard	note1:ψ=(L+W)/2 ；L= Length，W=Width note2: the distance between two dots ＞5mm
		0.1mm<ψ≦0.25mm	3	
		ψ＞0.25mm	0	

3.1.3 .FPC

No	Defect item	Criteria		Remark
1	Copper screen peel (Major defect)	Copper screen peel 【Reject】		
2	No release tape or peel (Major defect)	No release tape or peel 【Reject】		
3	Dirty dot and impurity of FPC for customer using side (minor defect)	Specification	Allowable	note1: Cannot have stride ITO impurities
		ψ≦0.25mm	2	
		ψ>0.25	0	

3.1.4 Black tape & Mara tape

1	FPC or H/S black tape shift (minor defect)	1.shift spec: 1)glue to the polarize 【Reject】 2) IC bare 【Reject】 2. left-and-right spec: 1) exceed of FPC edge or H-S edge 【Reject】 2)IC bare 【Reject】	
2	No black tape (Major defect)	No black tape 【Reject】	
3	Tape position mistake (minor defect)	Not by engineering drawing 【Reject】	
4	Mara tape defect (minor defect)	Peel before pulling the protecting film. 【Reject】	

3.1.5 Silicon and Tuffy glue

No	Defect item	Criteria	Remark
1	Quantity of silicon (minor defect)	Uncover the ITO and circuit area. 【Reject】	note: compared by engineering drawing.

No	Defect item	Criteria	Remark
2	Tuffy glue (minor defect)	1. Uncover the reveal copper area 【Reject】 2. Cover layer 0.3mm(Min) ~ 3.0mm(Max) 【accept】	note:if customer has special requirement , refer to the technical document. 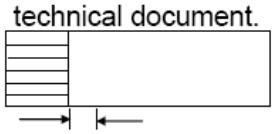
3	Depth of glue covering (minor defect)	Depth of glue covering overtop front Polarizer 【Reject】	Except of the special requirement。

3.2 Electrical criteria

No	Defect item	Criteria	Remark
1	No display (Major defect)	No display 【Reject】	
2	Missing line (Major defect)	Missing line 【Reject】	
3	Seg-com light and dark (Major defect)	Seg-com light and dark 【Reject】	ND filter 2% test
4	No display in immobility (Major defect)	No display in immobility 【Reject】	
5	Flicker of Pattern (Major defect)	Flicker of Pattern 【Reject】	
6	Mura (Major defect)	ND filter 2% test	
7	Over current (Major defect)	Over current 【Reject】	
8	Voltage out of specification (Major defect)	Voltage out of specification 【Reject】	
9	Pattern blur ,error code (Major defect)	Pattern blur ,error code 【Reject】	
10	Dark light, Flicker (Major defect)	Dark light, Flicker 【Reject】	

No	Defect item	Criteria	Remark	
11	Black/White dots、Dirty dots、eyewinker (Major defect)	Specification	Allowable	Note1: disregard if out of AA 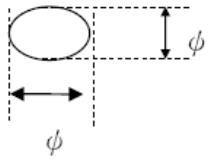
		ψ≦0.15mm	disregard	
		0.15mm<ψ ≦ 0.25mm	2	
		0.25mm<ψ ≦ 0.3mm	1	
		0.3mm<ψ	0	
12	Fiber、glass cratch、polarizer scratch/folded (minor defect)	W≦0.03mm	disregard	note1: L : Length，W : Width note2: disregard if out of AA 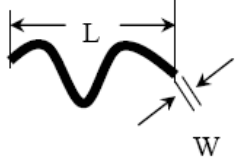
		0.03mm<W≦0.05mm ; L≦3.0mm	2	
		0.05mm<W≦0.1mm; L≦3.0mm	1	
		W>0.1mm ; L>3.0mm	0	

11. Precautions For Using LCD Modules

Please pay attentions to the followings as using the LCD module.

12.1 Handling

(a) Do not apply strong mechanical stress like drop, shock or any force to LCD module. It may cause improper operation, even damage.

(b) Because the ITO film very fragile and easy to be damaged, do not hit, press or rub the display surface with hard materials.

(c) Do not put heavy or hard material on the display surface, and do not stack LCD modules.

(d) If the display surface is dirty, please wipe the surface softly with cotton swab or clean cloth.

(e) Wipe off water droplets or oil immediately.

(f) Protect the LCD module from ESD. It will damage the LSI and the electronic circuit.

(g) Do not touch the output pins directly with bare hands.

(h) Do not disassemble the LCD module.

12.2 Storage

(a) Do not leave the LCD modules in high temperature, especially in high humidity for a long time.

(b) Do not expose the LCD modules to sunlight directly.

(c) The liquid crystal is deteriorated by ultraviolet. Do not leave it in strong ultraviolet ray for a long time.

(d) Avoid condensation of water. It may cause improper operation.

(e) Please stack only up to the number stated on carton box for storage and transportation. Excessive weight will cause deformation and damage of carton box.

12.3 Operation

(a) When mounting or dismounting the LCD modules, turn the power off.

(b) Protect the LCD modules from electric shock.

(c) The Driver IC control algorithms stated above should always obeyed to avoid damaging the LSI and electronic circuit.

(d) Be careful to avoid mixing up the polarity of power supply for backlight.

(e) Absolute maximum rating specified above has to be always kept in any case. Exceeding it may cause non-recoverable damage of electronic components or, nevertheless, burning.

(f) When a static image is displayed for a long time, remnant image is likely to occur.

(g) Be sure to avoid bending the FPC to an acute shape, it might break FPC.

12.4 Others

(a) If the liquid crystal leaks from the panel, it should be kept away from the eyes or mouth.

(b) It is recommended to peel off the protection film on the ITO film slowly so that the electrostatic charge can be minimized.

(c) It is recommended to peel off the protection film on the polarizer slowly so that the electrostatic charge can be minimized.

12. Records Of Version

Version	Revise Date	Page	Content
0.0	2012-10-16	All	New issue